HORIZONTAL MAGNETIC LEVEL SWITCH EXPLOSION PROOF LXT201 Thread Type

Technical Data

Enclosure housing: Explosion proof– EEx d IIC-T6, II 2 GD; IP66
Process connection: 1½"~3"NPT male, thread type
Material: Wetted parts 316 stainless steel
Pressure limits: 3.0 MPa (30 kg/cm²), option: up to 4.5 MPa
Float working specific gravity: ≥0.7
(option: less than 0.7 available on request)
Maximum temperature: -20°C to +150°C
Switch function: Micro switch 1 x SPDT; 2 x SPDT option
Switch rating: 3A/250VAC, 5A/125VAC, 4A/30VDC
Conduit connection: ½"NPT, ¾"NPT female, option available

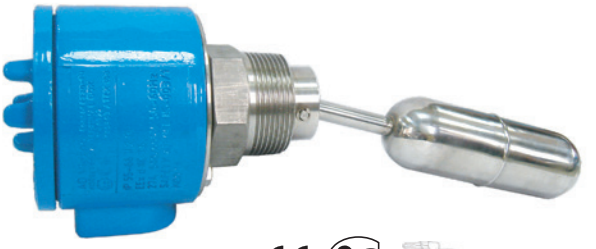

TYPE APPROVED PRODUCT

Dimensions

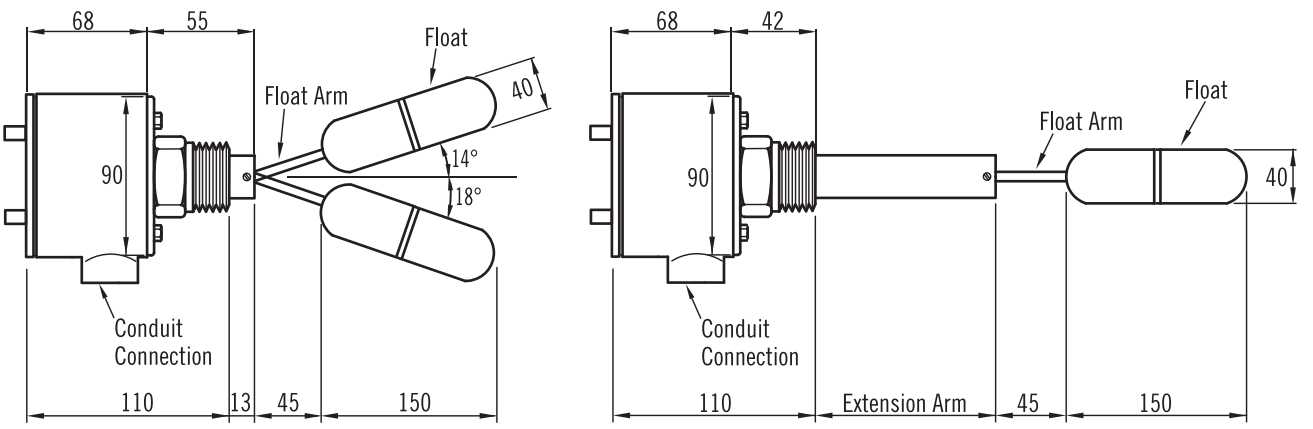

*Option: Extension arm specify length available (standard 150mm).

unit=mm

Ordering Information

LXT201	Code	Type		
	S	Standard type	E	Extension Arm Type

Code	Process Connection Size
	(1) 1½" (2) 2" (3) 3" (4) Option

Code	Process Connection Rating - Male
	(A) NPT (B) Option

Code	Conduit Connection Size
	(1) ½"NPT (2) ¾"NPT (3) Option

Code	Wetted Parts Material
	(1) SS316 (2) Option

Code	Switch Function- Micro Switch
1	One switch, SPDT x 1
2	Two switch, SPDT x 2

LXT201							Complete Ordering Code

Wire Drawing

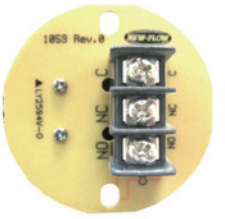

1 SPDT

2 SPDT

WWW.NEW-FLOW.COM • TEL: 886-7-8135500 • FAX: 886-7-8225588 • Email: info@new-flow.com